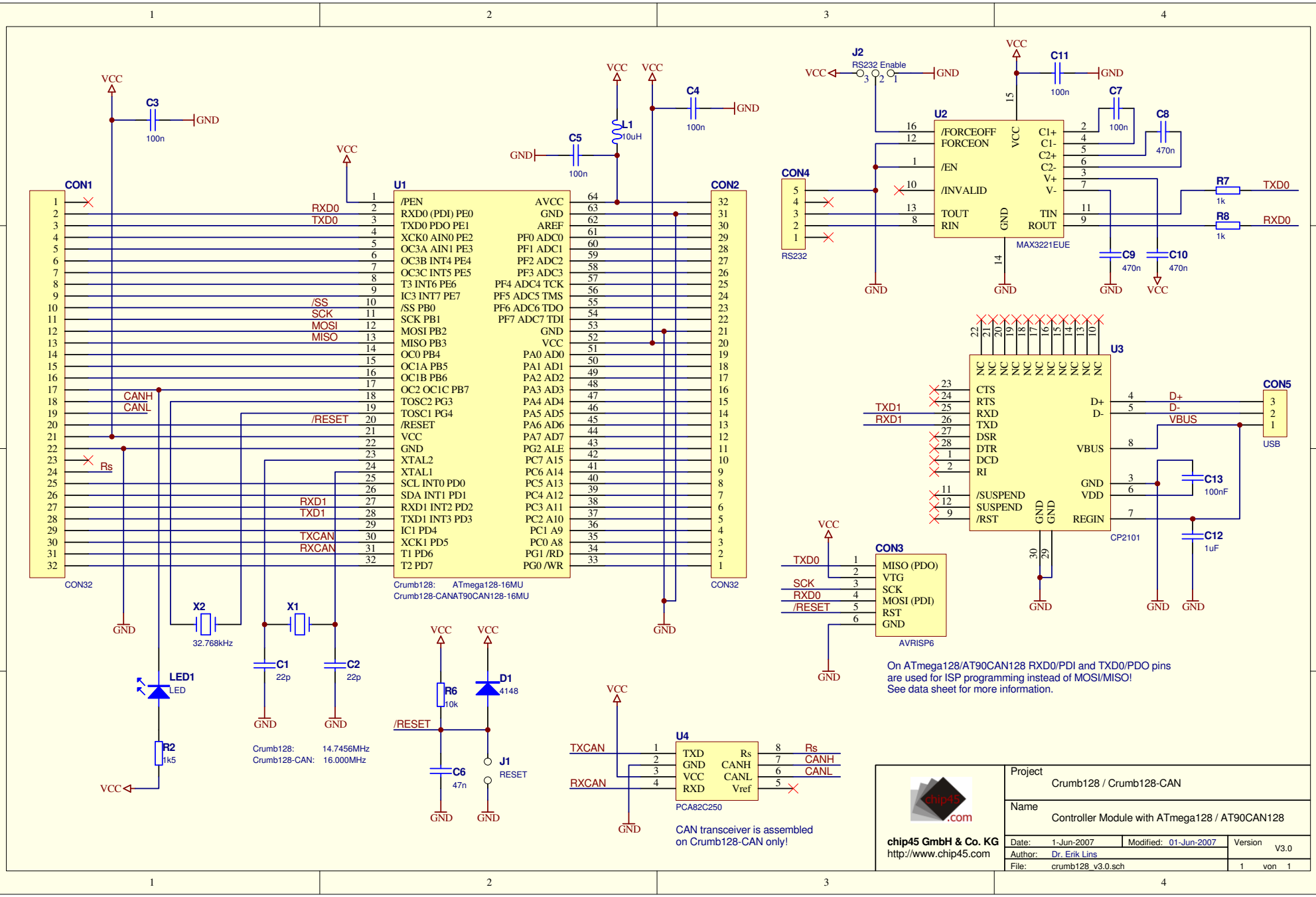
CON1
CON32
U1
Crumb128: ATmega128-16MU
Crumb128-CANAT90CAN128-16MU
CON2
CON32
C3
100n
C4
100n
C5
100n
L1
10uH
X2
32.768kHz
X1
C1
22p
C2
22p
LED1
LED
R2
1k5
Crumb128: 14.7456MHz
Crumb128-CAN: 16.000MHz
R6
10k
D1
4148
/RESET
C6
47n
J1
RESET
U4
PCA82C250
TXCAN
RXCAN
Rs
CANH
CANL
CAN transceiver is assembled on Crumb128-CAN only!
J2
RS232 Enable
C11
100n
C7
100n
C8
470n
U2
MAX3221EUE
CON4
RS232
C9
470n
C10
470n
R7
1k
R8
1k
TXD0
RXD0
U3
CP2101
CON5
USB
D+
D-
VBUS
C13
100nF
C12
1uF
CON3
AVRISP6
SCK
/RESET
On ATmega128/AT90CAN128 RXD0/PDI and TXD0/PDO pins are used for ISP programming instead of MOSI/MISO!
See data sheet for more information.
chip45 GmbH & Co. KG
http://www.chip45.com
Project
Crumb128 / Crumb128-CAN
Name
Controller Module with ATmega128 / AT90CAN128
Date: 1-Jun-2007
Modified: 01-Jun-2007
Version V3.0
Author: Dr. Erik Lins
File: crumb128_v3.0.sch
1 von 1