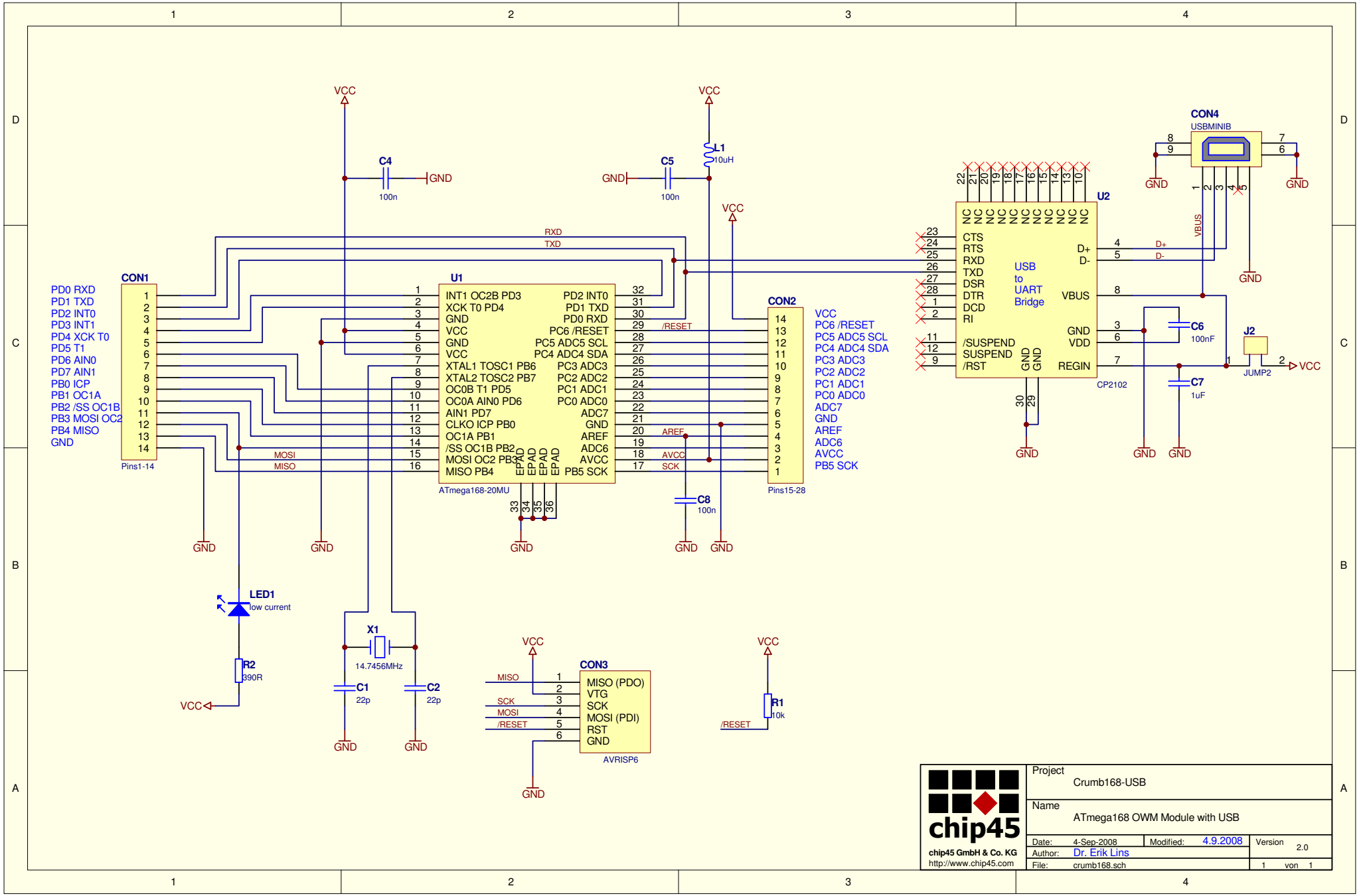

chip45 GmbH & Co. KG http://www.chip45.com	Project: Crumb168-USB
	Name: ATmega168 OWM Module with USB
	Date: 4-Sep-2008 Modified: 4.9.2008 Version 2.0
	Author: Dr. Erik Lins
	File: crumb168.sch 1 von 1