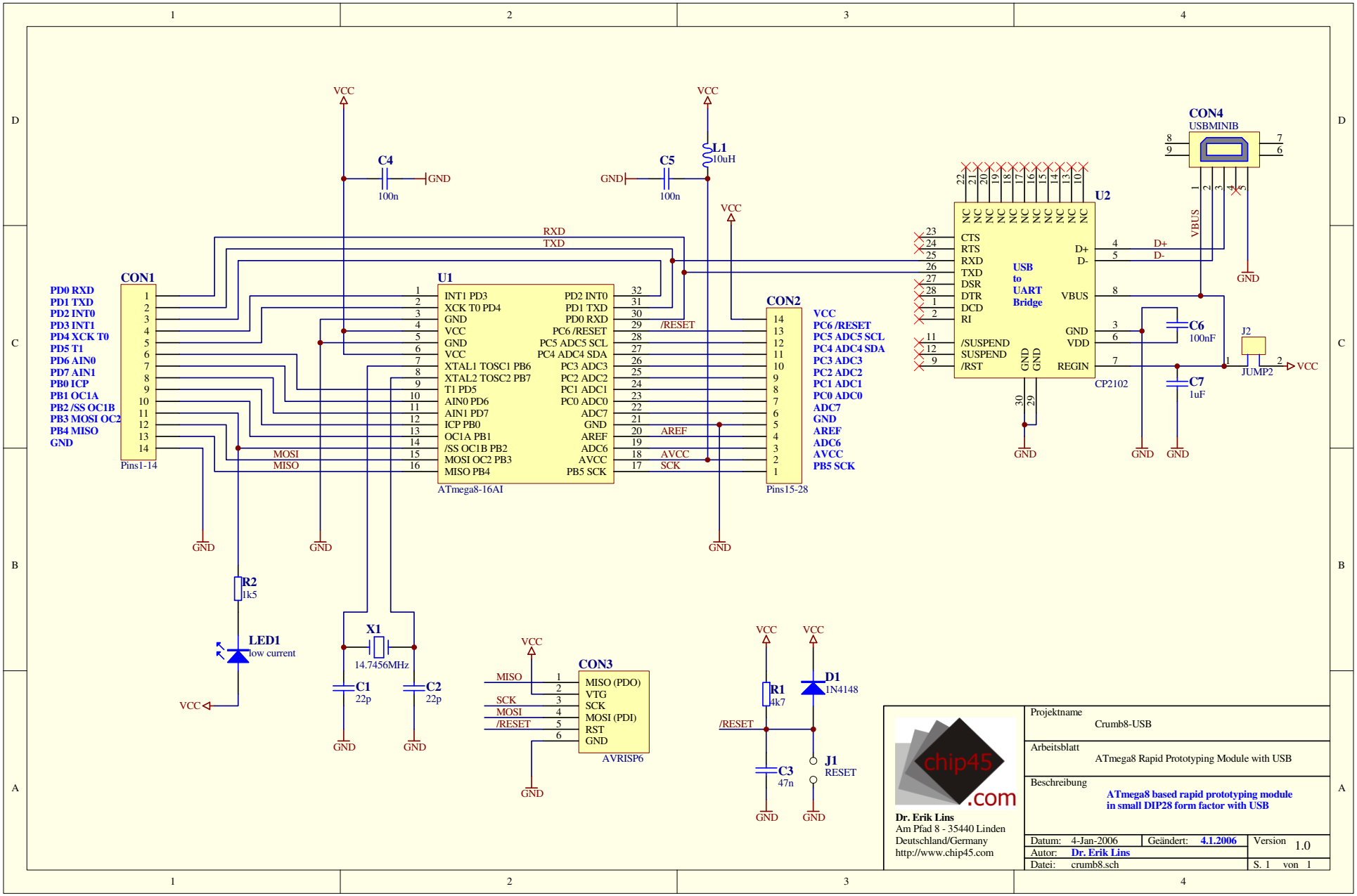
CON1
PD0 RXD
PD1 TXD
PD2 INT0
PD3 INT1
PD4 XCK T0
PD5 T1
PD6 AIN0
PD7 AIN1
PB0 ICP
PB1 OC1A
PB2 /SS OC1B
PB3 MOSI OC2
PB4 MISO
GND
Pins1-14
U1
INT1 PD3
XCK T0 PD4
GND
VCC
GND
VCC
XTAL1 TOSC1 PB6
XTAL2 TOSC2 PB7
T1 PD5
AIN0 PD6
AIN1 PD7
ICP PB0
OC1A PB1
/SS OC1B PB2
MOSI OC2 PB3
MISO PB4
PD2 INT0
PD1 TXD
PD0 RXD
PC6 /RESET
PC5 ADC5 SCL
PC4 ADC4 SDA
PC3 ADC3
PC2 ADC2
PC1 ADC1
PC0 ADC0
ADC7
GND
AREF
ADC6
AVCC
PB5 SCK
ATmega8-16AI
CON2
VCC
PC6 /RESET
PC5 ADC5 SCL
PC4 ADC4 SDA
PC3 ADC3
PC2 ADC2
PC1 ADC1
PC0 ADC0
ADC7
GND
AREF
ADC6
AVCC
PB5 SCK
Pins15-28
U2
CTS
RTS
RXD
TXD
DSR
DTR
DCD
RI
/SUSPEND
SUSPEND
/RST
USB
to
UART
Bridge
D+
D-
VBUS
GND
VDD
REGIN
CP2102
CON4
USBMINIB
VBUS
D+
D-
GND
C4
100n
C5
100n
L1
10uH
C6
100nF
C7
1uF
J2
JUMP2
R2
1k5
LED1
low current
X1
14.7456MHz
C1
22p
C2
22p
CON3
MISO (PDO)
VTG
SCK
MOSI (PDI)
RST
GND
AVRISP6
R1
4k7
D1
1N4148
C3
47n
J1
RESET
/RESET
RXD
TXD
/RESET
AREF
AVCC
SCK
MOSI
MISO
Dr. Erik Lins
Am Pfad 8 - 35440 Linden
Deutschland/Germany
http://www.chip45.com
Projektname
Crumb8-USB
Arbeitsblatt
ATmega8 Rapid Prototyping Module with USB
Beschreibung
ATmega8 based rapid prototyping module
in small DIP28 form factor with USB
Datum: 4-Jan-2006
Geändert: 4.1.2006
Version 1.0
Autor: Dr. Erik Lins
Datei: crumb8.sch
S. 1 von 1